

Gemini 345Lg

Datasheet

Version 2.3

Copyright Orbbec Inc. All rights reserved. The product described may contain defects or errors or deviations from the published specifications. Contact your sales representative to obtain the latest Orbbec product specifications. Orbbec is not responsible for any users infringing on third party copyright or other rights in the use of Orbbec products. In addition, Orbbec does not assume any liability for damages or any losses resulting from the use of this product. All information provided here is subject to change without notice.

Revision History

Version	Description	Revision Date
V2.0	● Initial release	2025-09-09
V2.1	● modify interface Description	2025-12-09
V2.2	● modify D2C Parameters	2025-7-20
V2.3	● Update usage environment info	2026-11-12

ORBBEC. All Rights Reserved. https://www.orbbec.com/

Note: Orbbec reserves the right to change any information in the document without prior notice.

Contents

0. Glossary 5
1. Product Brief 7
2. Product Specifications 8
3. Product Information 11
3.1 Product Pictures 11
3.2 Product Drawings 12
3.2.1 Product Drawings 12
3.2.2 Product Dimensions & Weight 13
3.3 Product Interfaces 13
3.3.1 GMSL2 FAKRA 14
3.3.2 USB Type-C 16
3.4 Product Components 17
3.4.1 Overview of Product Components 17
3.4.2 Laser Diode Module 18
3.4.3 Infrared Module 18
3.4.4 RGB Module 19
3.4.5 IMU 19
4. Functional Specifications 21
4.1 Vendor Identifier (VID) and Product Identifier (PID) 21
4.2 Platform and System Requirements 21
4.3 Camera system Framework 22
4.4 Image Data Stream 22
4.5 Field of View 24
4.5.1 Definition of Depth Field of View 24
4.5.2 Typical Depth Intrinsics 25
4.5.3 Overview of Stream FOV 25
Software D2C FOV @ 2m 25
4.5.4 FOV Illustrations 26
4.6 Depth to Color Alignment 26
4.6.1 Depth to Color by Software 27
4.6.2 Depth to Color by Hardware 29
4.7 Minimum-Z Depth 31
4.8 Coordinate System 31
4.9 Camera Start Point Referenc 33
4.10 Streaming Mode 34
4.11 Multi-Camera Synchronization 34
4.11.1 Multi-camera Synchronization 34
4.11.2 Description of multi-machine synchronization interface 34
4.12 Time Synchronization 35
4.13 Camera Functions 35
4.13.1 Depth Camera Functions 35

ORBBEC. All Rights Reserved. https://www.orbbec.com/

Note: Orbbec reserves the right to change any information in the document without prior notice.

5. Performance 39
5.1 Depth Performance 39
5.1.1 Depth Quality Assessment 39
5.1.2 Typical depth performance for Gemini 345Lg 39
5.2 Electrical Performance 41
5.2.1 Power Supply 41
5.2.2 Power Consumption 41
5.2.3 Storage and Powered Conditions 42
5.2.4 ESD Performance 42
5.3 Physical Performance 43
5.3.1 Ingress Protection 43
6. Firmware 44
6.1 Firmware Update & Cautions 44
6.2 How to Update Firmware 44
6.3 Recovery 44
7. SDK 45
7.1 Temperature Sensor and Recording 45
7.2 Driving Instructions 45
8. Use Guidance 46
8.1 Packing List 46
8.2 Initialization and Operation 46
9. Regulatory Compliance 48
9.1 Laser Safety certification 48
9.2 EMC Regulatory Compliance 48
9.3 Environment Regulatory Compliance 48
9.4 Reliability Verification 49
10. System Integration Guide 50
10.1 Installation Recommendations 50
10.2 Heat Dissipation 50
10.3 Cable Design Guide 50
11. Cautions 51
Appendix A Gemini 345Lg 2D Mechanical Diagram 52

ORBBEC. All Rights Reserved. https://www.orbbec.com/

Note: Orbbec reserves the right to change any information in the document without prior notice.

0. Glossary

Terms	Descriptions
ASIC	Application-specific Integrated Circuit
Baseline	The distance between the optical centers of the two cameras used for depth calculation
D2C	Depth to Color maps each pixel on a depth map to the corresponding color image according to the intrinsic and extrinsic parameters of the depth camera and color camera
Depth	Depth video streams are similar to color video streams except each pixel has a value representing the distance away from the sensor instead of color information
Depth Camera	Includes depth imaging module and external interface, of which the former is generally composed of an infrared projector, infrared camera, and depth computing processor
FOV	Field of View describes the angular extent of a given scene that is captured by a camera, which can be measured in the horizontal, vertical, and diagonal
I2C	Refers to a simple bi-directional two-wire synchronous serial bus developed by Philips
IMU	Inertial measurement unit.
IR	Light in the infrared spectrum, which ranges from 700 nm and above
IR Camera	A camera capable of seeing light in the IR spectrum
ISP	Image signal processor, which is used for image post-processing
LDM	Laser Diode Module
MIPI	Mobile Industry Processor Interface (MIPI) Alliance. MIPI is an open standard and specification formulated by the MIPI Alliance for mobile application processors
PCBA	PCBA (Printed Circuit Board Assembly) refers to a fully assembled printed circuit board (PCB) that includes all the electronic components mounted and soldered onto it.
Point Cloud	A discrete set of data points in space
RGBM/RGB Module	Color Camera
ROI	Region of Interest(ROI) in image processing refers to a specific area

ORBBEC. All Rights Reserved. https://www.orbbec.com/

Note: Orbbec reserves the right to change any information in the document without prior notice.

	selected from the entire image
SBC	A Single Board Computer (SBC) is a microcomputer where all the logic circuits, timing circuits, internal memory, and external interfaces are integrated onto a single printed circuit board. A typical example is the Raspberry Pi
SoC	System on Chip, an integrated circuit (IC) that integrates all components of a computing system
UVC	USB Video Class (UVC) is a protocol standard defined for USB video capture devices and has become one of the USB.org standards
VCSEL	Vertical-Cavity Surface-Emitting Laser (VCSEL) is a type of semiconductor laser where the laser light is emitted perpendicular to the surface of the device
DoF	Degree of Freedom, In an Inertial Measurement Unit(IMU), 6DoF means the device can measure all six degrees of freedom.
TBD	To Be Determined. Information will be provided in a later revision.

ORBBEC. All Rights Reserved. https://www.orbbec.com/

Note: Orbbec reserves the right to change any information in the document without prior notice.

1. Product Brief

Orbbec Gemini 345Lg is a highly reliable product designed for various outdoor scenarios, based on active and passive stereo vision technology. Equipped with Orbbec MX6800 ASIC, the 3D camera delivers a high-reliability system solution specifically developed for outdoor scenarios. The camera produces accurate depth images with a wide field of view (FOV), integrates a wide dynamic range RGB color module and a high-performance color image processor to output high-quality color images, and includes a built-in high-precision inertial measurement unit (IMU) that provides various types of motion attitude information.
In addition, the camera performs hardware-based depth image computation and depth-to-color image spatial alignment conversion, ensuring long-term accurate output while reducing the computational demands on the host system. It also enables unified hardware timestamp marking for all sensor data streams and the host system, along with a flexible frame synchronization mechanism. This ensures time alignment between depth and color images, as well as multi-camera time alignment, greatly simplifying system application complexity in multi-device usage scenarios and offering high scalability.
The camera is available with either USB or GMSL2 FAKRA interfaces. Both versions feature an IP67 rating for dust and water resistance. The USB Type-C interface supports power delivery and data transmission, enabling plug-and-play operation. It can be easily configured and controlled via the Orbbec SDK, making it suitable for image evaluation, debugging, production, and upgrade stages. The GMSL2 FAKRA (C-Code) interface, configured for 6Gbps, is ideal for applications demanding high stability and long-distance transmission. When using GMSL transmission, the host platform must be equipped with a GMSL2 deserializer. The camera supports Maxim Integrated's GMSL serializer driver and is compatible with Orbbec's camera driver, allowing image data acquisition and control through the Orbbec SDK.
Gemini 345Lg is designed for flexible use across various product stages and offers the following features:

- Active/Passive Stereo Vision, ensuring reliable performance in dynamic environments
- Wide Depth FOV: H 104° x V 87°
- Depth Accuracy: ±3% at 3 meters
- Wide Color FOV: H 137° x V 71°
- Color Wide Dynamic Range up to 100dB
- Frame synchronization across multiple sensors
- Hardware timestamp for system and camera module time synchronization
- Multi-device synchronization support
- Broad temperature adaptation range and strong adaptability in motion scenarios
- Long-distance stable data transmission via GMSL2 FAKRA interface
- IP67 rating

ORBBEC. All Rights Reserved. https://www.orbbec.com/

Note: Orbbec reserves the right to change any information in the document without prior notice.

2. Product Specifications

Parameter	Gemini 345Lg
Use Environment	Outdoor
Technology	Active & Passive Stereo
Baseline	88mm
LDM Wavelength	850 ± 6nm
Operating Range[1]	Wide: 0.19 – 10m Standard: 0.22 – 10m
Ideal Range	0.3 - 6m
Mini-Z	Wide: 0.19m Standard: 0.22m
Depth Accuracy[2]	± 3% (3m & 90% x 90% ROI) ± 6% (6m & 80% x 80% ROI)
Temporal Precision[2]	0.6% @ 3m
Spatial Precision[2]	≤ 1.2% (1280 x 960 @ 3m & 90% x 90% ROI) ≤ 3% (1280 x 960 @ 6m & 80% x 80% ROI)
Fill Rate	≥ 99% (1m & 90% x 90% ROI)
Depth Resolution @ Frame Rate	Up to 1280 x 960 @ 30fps
Depth FOV	Wide: H104° x V87° ± 3° @ 2m Standard: H91° x V78° ± 3° @ 2m
Depth Filter	lens: All-Pass, IR: Visible + NIR-pass Filter
Sensor Type	IR: Global Shutter Color: Rolling Shutter
RGBM Resolution @ Frame Rate	Up to 1920 x 1080 @ 30fps
RGB Module FOV	Aspect Ratio 16:9 H137° x V71° ± 3° Aspect Ratio 4:3 96° x 71° ± 3°
IMU	6 Dof
Depth Processing	MX6800 ASIC
Data Connection	GMSL2 / USB 3.0
Interface[3]	FAKRA – C Code; USB - C
ESD	Class A Contact discharge: ±8kV, Air discharge: ±15kV
RE	≥ 6 dB
Typepical Average Power Consumption[4]	3.6W @ GMSL; 2.8W @ USB

ORBBEC. All Rights Reserved. https://www.orbbec.com/

Note: Orbbec reserves the right to change any information in the document without prior notice.

Max Average Power Consumption[4]	3.6W @ GMSL; 3.5W @ USB
Peak Power Consumption[4]	5W @ GMSL; 6.7W @ USB
Power Supply	GMSL: ≥600mA @ 12V USB: 1.5A @ 5V
Operating Voltage Range[5]	GMSL: 9 – 15V (Typical: 12V) USB: 4.75 – 5.25V (Typical: 5V)
Operating Environment	-20℃ - 65℃; <95% RH (non-condensing)
Storage Environment	-40℃ - 85℃; <95% RH (non-condensing)
Protection[6]	IP67
Supported Functions	Hardware Spatial Alignment of Depth to Color Hardware Timestamps Multi-camera Sync
Dimensions(W x H x D)	124 x 29 x 43.95mm
Weight	223g
Installation	Back :4x M3, Max Torque: 6.5kgf.cm

Notes:

[1] When the measured object's reflectivity is greater than 10%, the camera can provide reliable depth data at up to 10 meters. The theoretical maximum ranging distance is 65 meters, though actual accuracy varies with distance and target surface properties.

[2] The region of interest (ROI) is shown in the figure below. All depth performance metrics listed above are validated on the production line for each 3D camera before shipment and represent its performance under typical usage conditions.It should be noted that throughout the operational life of the 3D camera, external environmental factors may significantly affect its depth performance.

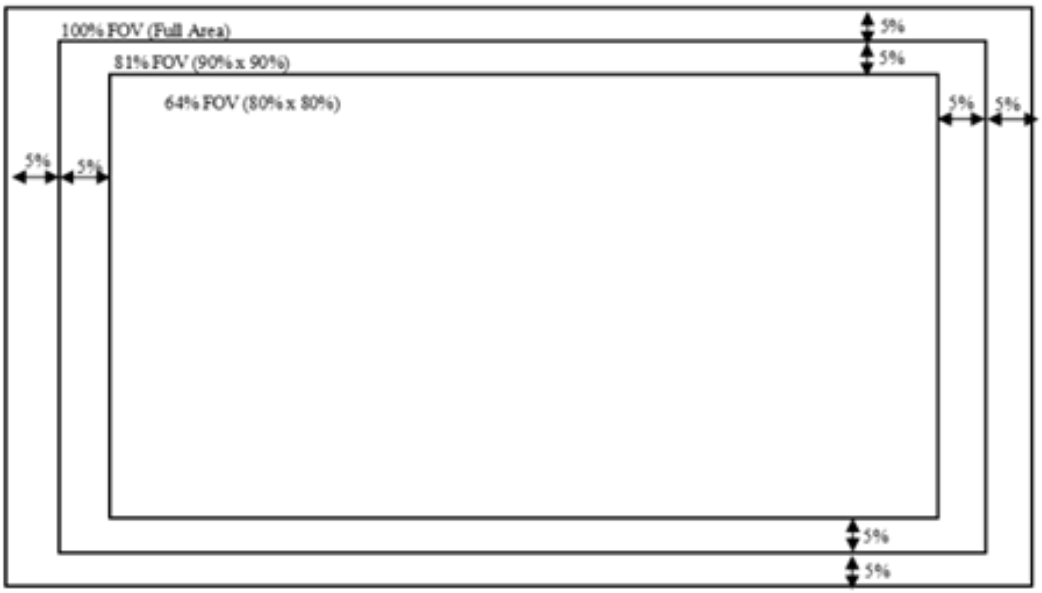

[3] The USB interface of this product is primarily intended for development and debugging purposes. For final product deployment, the use of the GMSL2 FAKRA interface (C-Code) is recommended, which supports a data rate of 6 Gbps. To maintain the IP67 rating, the USB protective seal must remain in place when the USB port is not in use._

ORBBEC. All Rights Reserved. https://www.orbbec.com/

Note: Orbbec reserves the right to change any information in the document without prior notice.

[4] Power consumption data is measured mainly based on the following operating modes.

Laser power level	low
Depth	640 x 480 @ 30 fps Y16
RGB	1920 x 1080 @ 30 fps YUYV
Left IR	1280 x 960 @ 30 fps Y8
Right IR	1280 x 960 @ 30 fps Y8
IMU ODR (output data rate)	200Hz

[5] The product supports a wide voltage input range. However, if significant load is present on the board or cables, causing excessive voltage drop, operational issues may occur.

[6] The camera is equipped with both a GMSL2 FAKRA interface and a USB interface. When properly connected, the system meets IP67 dust and water resistance standards. To maintain this protection level when using the GMSL2 FAKRA interface, a waterproof connector must be used after wiring, and the factory-installed protective seal must remain intact. When using the USB interface, a waterproof USB cable is required to ensure compliance with the dust and water resistance rating.

ORBBEC. All Rights Reserved. https://www.orbbec.com/

Note: Orbbec reserves the right to change any information in the document without prior notice.

3. Product Information

3.1 Product Pictures

Table 3-1-1 Product pictures for Gemini 345Lg

Front View		**BACK View**	
TOP View		**Botto m View**	
Left View		**Right View**	
Front -45° View		**Back-4 5° View**	

ORBBEC. All Rights Reserved. https://www.orbbec.com/

Note: Orbbec reserves the right to change any information in the document without prior notice.

3.2 Product Drawings

3.2.1 Product Drawings

Table 3-2-1 Product drawings for Gemini 345Lg

Name	Gemini 345Lg
Front View	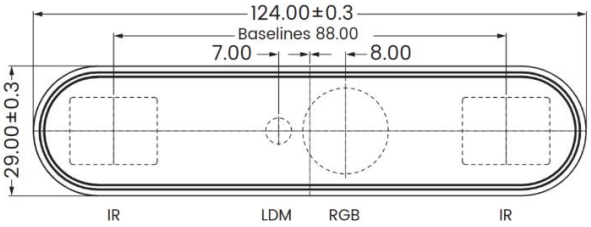
Rear View	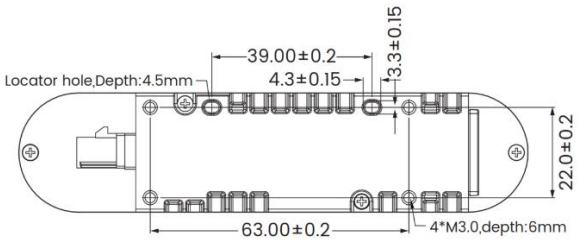
Top View	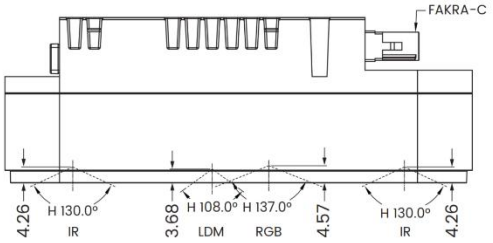
Bottom View	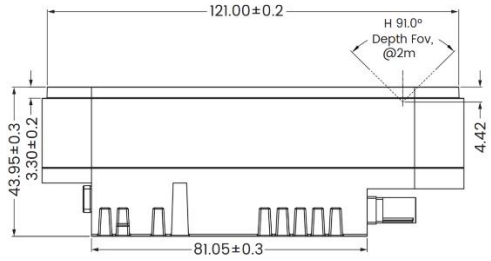
Side View	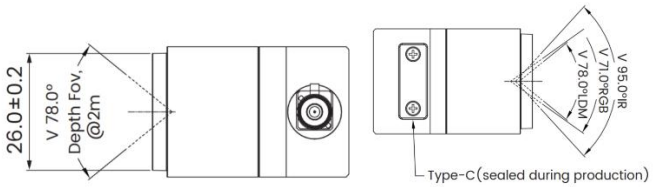

ORBBEC. All Rights Reserved. https://www.orbbec.com/

Note: Orbbec reserves the right to change any information in the document without prior notice.

3.2.2 Product Dimensions & Weight

Table 3-2-3 Product dimensions & weight for Gemini 345Lg

Name	Gemini 345Lg
Width/mm	124 ± 0.3
Height/mm	29 ± 0.3
Depth/mm	43.95 ± 0.3
N.W/g	223 ± 3

3.3 Product Interfaces

The Gemini345Lg camera is equipped with both USB and GMSL2 FAKRA interfaces, delivering integrated functionality for power supply, high-speed data transmission, and multi-camera synchronization. The GMSL2 FAKRA interface complies with the GMSL2 standard, supporting a data rate of 6 Gbps. When the GMSL2 FAKRA interface is in use, the USB port must remain securely sealed.
For initial development, testing, and production validation phases, the USB interface is recommended to facilitate rapid prototyping and verification. For mass production and end-product deployment, the use of the GMSL2 FAKRA interface is advised

ORBBEC. All Rights Reserved. https://www.orbbec.com/

Note: Orbbec reserves the right to change any information in the document without prior notice.

3.3.1 GMSL2 FAKRA

The following diagram illustrates the GMSL2 FAKRA interface and its supported features.

Table 3-3-1 GMSL Hardware Interface Schematic

Interface	GMSL2 FAKRA
Schematic	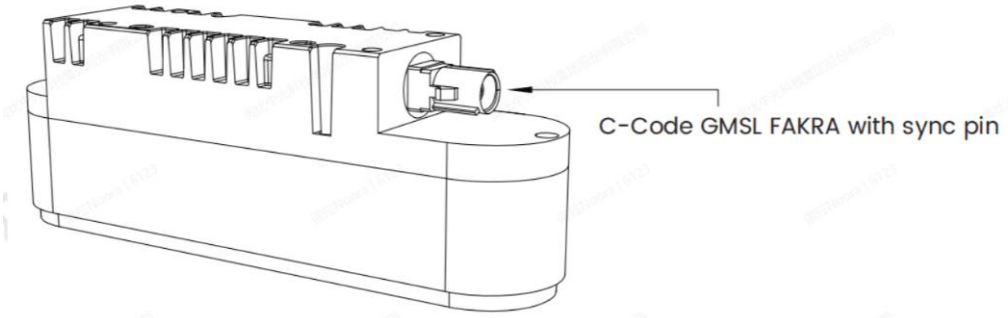

Table 3-3-2 GMSL Interface Functional Definition

Pin Name	I/O	Definition	Function Description	Deserializer Requirement Priority
MFP0	O	Reserved	NC	
MFP1	O	Reserved	NC	
MFP2	I	Reserved	NC	
MFP3	O	Reserved	NC	
MFP4	I	CFG0	Configuration of the working mode of The serializer IC.	/
MFP5	I	CFG1	Configuration of the working mode of The serializer IC.	/
MFP6	O	SYNC_IN	Multi-machine synchronization SYNC_IN, The serializer IC outputs to the ASIC, high pulse valid, pulse width ≥ 1ms.	Level II — Used when multi-camera synchronization operation is required.
MFP7	O	PPS	Hardware time synchronization signal, high pulse valid, pulse width ≥ 1ms.	Level II — Used when timing synchronization operation is required.
MFP8	O	RESTART	Camera power switch control: Low level turns on the camera power, high level turns off the camera power. Power-on defaults to turning on the camera.	Level II — Used when module power reset operation is required.

ORBBEC. All Rights Reserved. https://www.orbbec.com/

Note: Orbbec reserves the right to change any information in the document without prior notice.

MFP9	I	Resetved	NC	
MFP10	O	Resetved	NC	
MFP11	I	Resetved	NC	
MFP12	O	Resetved	NC	
MFP13	/	/	/	/
MFP14	/	/	/	/
MFP15	O/I	I2C_SDA	I2C_SDA(Master)	Level I — Mandatory for use.
MFP16	O	I2C_SCL	I2C_SCL(Master)	Level I — Mandatory for use.

Different functions are assigned distinct priority levels based on product design. The appropriate interface can be selected according to specific functional requirements to achieve targeted implementation.

The host controller requires a matching deserialization circuit to ensure proper data reception and parsing

ORBBEC. All Rights Reserved. https://www.orbbec.com/

Note: Orbbec reserves the right to change any information in the document without prior notice.

3.3.2 USB Type-C

Below is the description of the Gemini345Lg USB interface.

Table 3-3-3 USB Hardware Interface Schematic

Interface	USB
Schematic	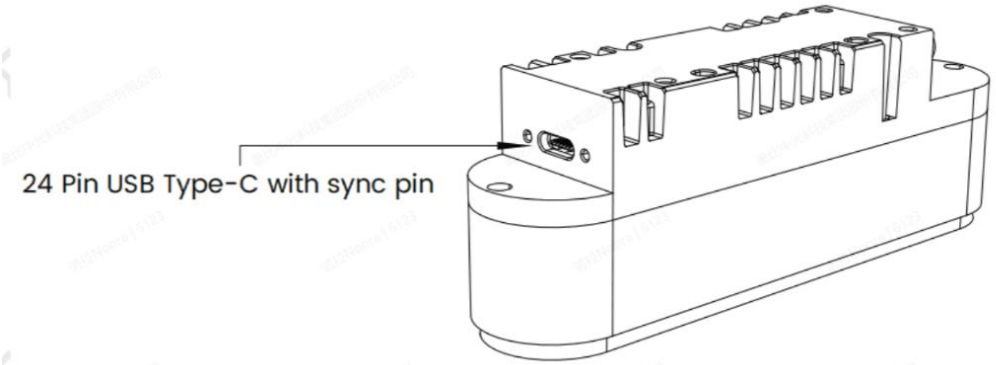

Table 3-3-4 USB Interface Definition

Pin	Name	Definition	Pin	Name	Definition
A1	GND	Ground	B1	GND	Ground
A2	TX1+	High-speed Differential Signaling#1, TX, Positive	B2	TX2+	High-speed Differential Signaling#2, TX, Positive
A3	TX1-	High-speed Differential Signaling#1 TX Negative	B3	TX2-	High-speed Differential Signaling#2 TX Negative
A4	VBUS	Power	B4	VBUS	Power
A5	CC1	Port configuration	B5	CC2	Power configuration
A6	D+	USB2.0 Differential Signaling#1, Positive	B6	D+	USB2.0 Differential Signaling#2, Positive
A7	D-	USB2.0 Differential Signaling#1, Negative	B7	D-	USB2.0 Differential Signaling#2 ,Negative
A8	SBU1	Sideband use,3.3V,PPS (Default)	B8	SBU2	Sidebanduse,3.3V,SYNC_IN (Default)
A9	VBUS	Power	B9	VBUS	Power
A10	RX2-	High-speed Differential Signaling#2 RX Negative	B10	RX1-	High-speed Differential Signaling#1 RX Positive
A11	RX2+	High-speed Differential Signaling#2 RX Positive	B11	RX1+	High-speed Differential Signaling#1 RX Negative

ORBBEC. All Rights Reserved. https://www.orbbec.com/

Note: Orbbec reserves the right to change any information in the document without prior notice.

A12	GND	Ground	B12	GND	Ground

3.4 Product Components

3.4.1 Overview of Product Components

Table 3-4-1 Overview of product components for Gemini 345Lg

Gemini 345Lg
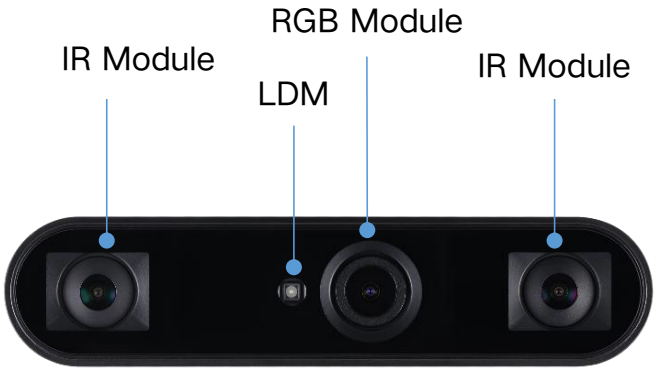
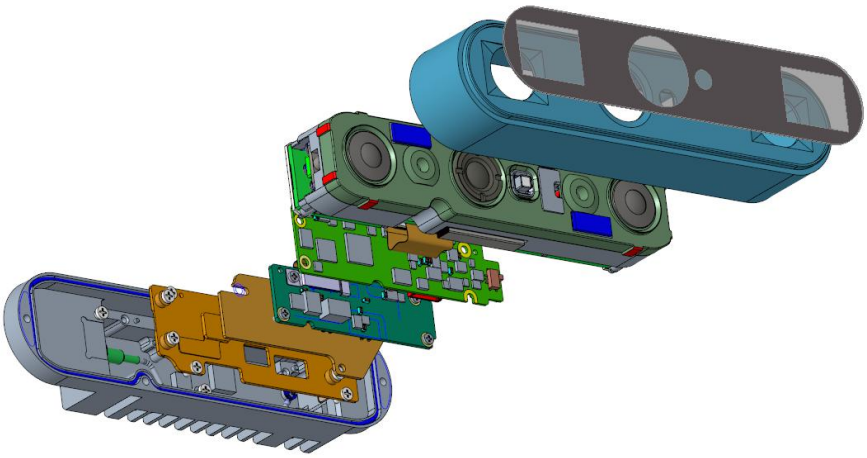

ORBBEC. All Rights Reserved. https://www.orbbec.com/

Note: Orbbec reserves the right to change any information in the document without prior notice.

3.4.2 Laser Diode Module

The laser module (LDM), also known as the laser emitting module, consists of a vertical-cavity surface-emitting laser array and other optic components. It projects a static infrared pattern onto the scene to enhance the texture of low-texture scenes and improves the ability of the 3D camera system to detect depth information. Under normal circumstances, the Gemini 345Lg laser module comply with Class 1 laser safety.

Table 3-4-2 LDM parameters

LDM	Gemini 345Lg
Type	Infrared
Component	Vertical Cavity Surface Laser Emitter(VCSEL) + Optics
Laser Controller	Pulse
Wavelength	850nm ± 6nm
Laser Compliance*	Class 1
Laser Power-down Temperature*	80℃
Horizontal FOV	108°
Vertical FOV	78°
FOV tolerance	±3.0°

Note: * LDM is considered Class 1 when integrated into Orbbec's 3D Cameras.

* LDM will power down while the module tested temperature is ≥ 80℃.

3.4.3 Infrared Module

Table 3-4-3 Infrared module parameters

IR Module	Gemini 345Lg
Filter Type	Visible + NIR-pass Filter
Active Pixels	1280 x 960
Sensor Aspect Ratio	4:3
Focus Type	Fixed
Shutter Type	Global Shutter
Horizontal FOV	130°
Vertical FOV	95°
Diagonal FOV	170°
FOV tolerance	±3.0°

ORBBEC. All Rights Reserved. https://www.orbbec.com/

Note: Orbbec reserves the right to change any information in the document without prior notice.

3.4.4 RGB Module

Table 3-4-4 RGB module parameters

RGB Module	Gemini 345Lg
Active Pixels	1920 x 1080
Sensor Aspect Ratio	16:9
Focus Type	Fixed
Shutter Type	Rolling Shutter
HDR	100dB
Horizontal FOV	137°
Vertical FOV	71°
Diagonal FOV	174°
FOV tolerance	±3.0°

3.4.5 IMU

Table 3-4-5 Gemini 345Lg IMU Specifications

IMU Parameters		Specifications
Timestamp Unit		us (Same source hardware timestamp is used for IMU, IR, RGB and Depth stream)
Transmittance Protocol		I2C
X/Y/Z Axis		The X, Y, and Z axis point right, downward, and forward relative to the camera front
Gyroscope	Format	3 x 32-bit float
	Range	±4.36rad/s (250dps); ±17.44rad/s (1000dps)
	Frequency (Hz)	100/200/400/800
Accelerometer	Format	3 x 32-bit float
	Range	± 29.4m/s² (3g); ± 58.8m/s² (6g)
	Frequency (Hz)	100/200/400/800
Temperature	Format	1 x 32-bit float
	Range	-40 - 85℃

ORBBEC. All Rights Reserved. https://www.orbbec.com/

Note: Orbbec reserves the right to change any information in the document without prior notice.

	Frequency (Hz)	Follows the gyroscope and accelerometer frequency

ORBBEC. All Rights Reserved. https://www.orbbec.com/

Note: Orbbec reserves the right to change any information in the document without prior notice.

4. Functional Specifications

4.1 Vendor Identifier (VID) and Product Identifier (PID)

Table 4-1-1 VID & PID table

Name	Model	PID	VID
Gemini 345Lg	G40075-272	0x2BC5	0x0813

4.2 Platform and System Requirements

Gemini 345Lg connect to the host computer using USB/GMSL2 FAKRA, which is compatible with various platforms and system requirements.

Table 4-2-1 Gemini 345Recommended Platforms and Systems

Chip	x86/x64		ARM
OS	Windows 10/11	Ubuntu 20.04 / 22.04	Ubuntu 20.04 / 22.04
USB	USB 3.0	USB 3.0	USB 3.0 / GMSL2
CPU	Quad-core, 2.9GHz and above	Quad-core, 2.9GHz and above	Cortex-A53 Quad-core, 1.8GHz and above
Reference model	Intel i7 10700 / Intel i5 8400	Intel i7 10700 / Intel i5 8400	NVIDIA Jetson Orin / Orin NX / Orin Nano
RAM	8GB RAM and above	8GB RAM and above	4GB RAM and above

ORBBEC. All Rights Reserved. https://www.orbbec.com/

Note: Orbbec reserves the right to change any information in the document without prior notice.

4.3 Camera system Framework

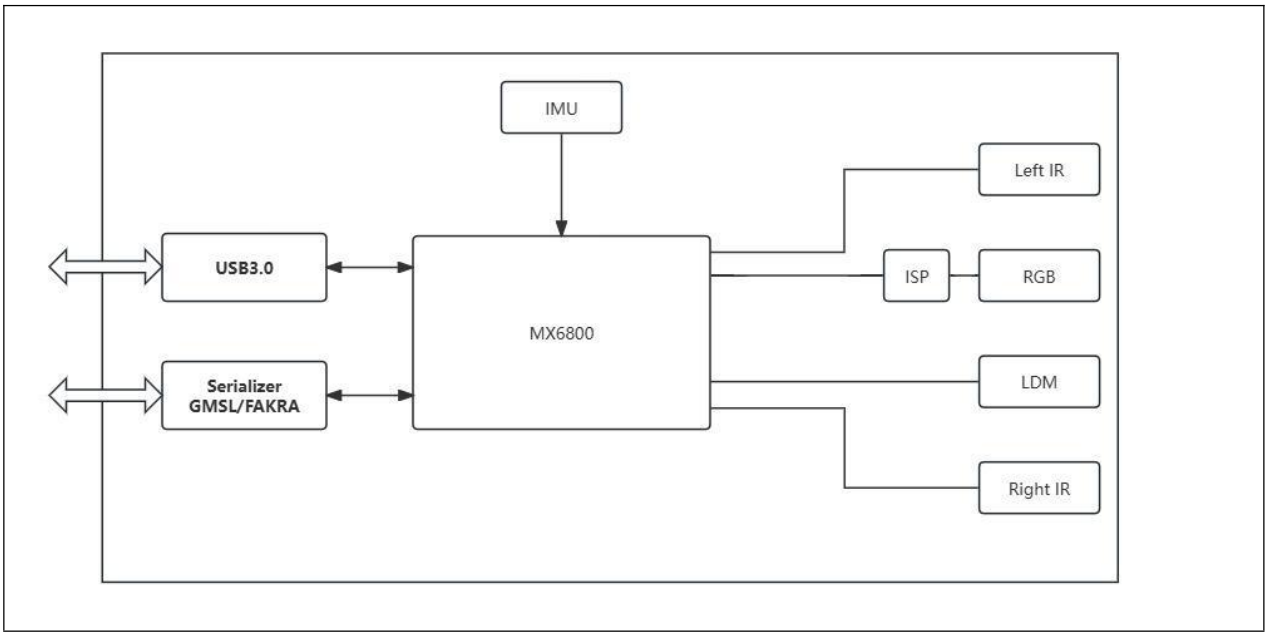

Figure 4-3-1 Gemini 345Lg System Framework Diagram

4.4 Image Data Stream

The Gemini 345Lg provide high-quality, multi-resolution depth stream data, as well as high-definition color stream data. The camera outputs depth stream data in Y16 format. The color stream data output by the camera is in MJPEG/YUYV format. Of these formats, MJPEG contributes significantly to reducing data transmission bandwidth and minimizes the risk of frame drops. For instance, at a resolution of 1280*720 and a frame rate of 15 fps, an RGB data stream in MJPEG format requires approximately 20 Mbps of bandwidth (the exact value may vary depending on the target image). Under the same configuration, YUYV format output requires approximately 211 Mbps. However, the MJPEG format is only supported for USB interface output, while GMSL only supports YUYV format output.

ORBBEC. All Rights Reserved. https://www.orbbec.com/

Note: Orbbec reserves the right to change any information in the document without prior notice.

Table 4-4-1 Output data streams (USB3.0)-Gemini 345Lg

Gemini 345Lg	Data Format	Aspect Ratio	Resolution	Frame Rate
Depth	Y16	4:3	1280 x 960	10, 15, 20, 30
			640 x 480	10, 15, 20, 30
IR	Y8	4:3	1280 x 960	10, 15, 20, 30
			640 x 480	10, 15, 20, 30
RGB	MJPEG & YUYV	16:9	1920 x 1080	10, 15, 20, 30
			1280 x 720	10, 15, 20, 30
			640 x 360	10, 15, 20, 30
		4:3	1280 x 960	10, 15, 20, 30
			640 x 480	10, 15, 20, 30

Table 4-4-2 Output data streams (GMSL2)-Gemini 345Lg

Gemini 345Lg	Data Format	Aspect Ratio	Resolution	Frame Rate
Depth	Y16	4:3	1280 x 960	10, 15, 20, 30
			640 x 480	10, 15, 20, 30
IR	Y8	4:3	1280 x 960	10, 15, 20, 30
			640 x 480	10, 15, 20, 30
RGB	YUYV	16:9	1920 x 1080	10, 15, 20, 30
			1280 x 720	10, 15, 20, 30
			640 x 360	10, 15, 20, 30
		4:3	640 x 480	10, 15, 20, 30

ORBBEC. All Rights Reserved. https://www.orbbec.com/

Note: Orbbec reserves the right to change any information in the document without prior notice.

4.5 Field of View

4.5.1 Definition of Depth Field of View

The image below shows the depth field of view (FOV). For a better understanding, we illustrate the angles that the depth and IR cameras "see".

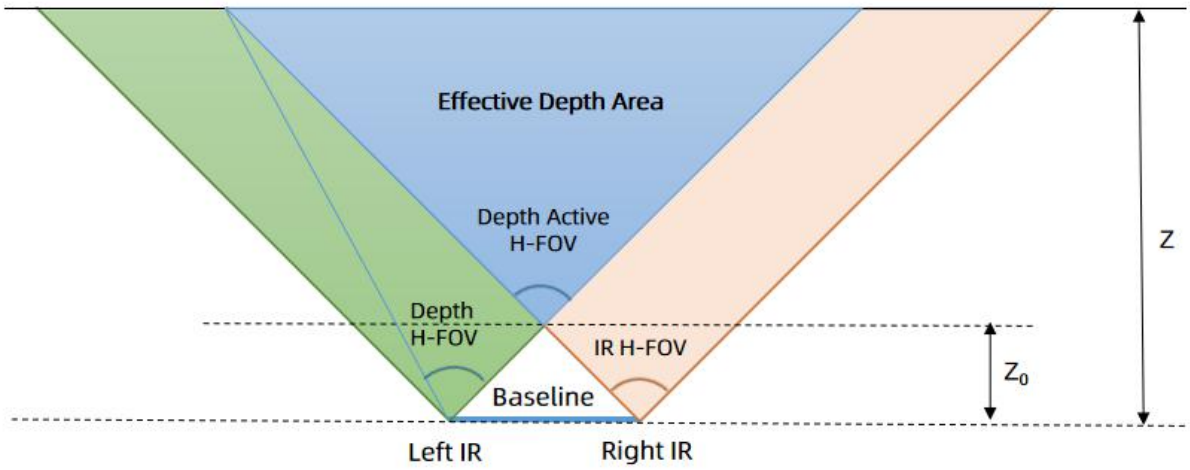

Figure 4-5-1 Depth Field of View to Depth Map illustration

Depth Field of View (Depth FOV) at any depth (Z) can be calculated using the following equation:

Table 4-5-1 Depth FOV calculation formulas

Calculation Formulas	Definitions
$\text{Depth H}-\text{FOV} = \arctan\left(\frac{cx}{fx}-\frac{B}{Z}\right)+\arctan\frac{width-1-cx}{fx}$	1. cx = X-direction image coordinate of the principle point of the depth image 2. fx = Depth camera focal length in pixels of x-axis 3. cy = Y-direction image coordinate of the principle point of the depth image 4. fy = Depth camera focal length 5. width = Depth image width 6. height = Depth image height 7. Depth active H-FOV = Left IR H-FOV
$\text{Depth Active H}-\text{FoV} = \arctan\frac{cx}{fx}+\arctan\frac{width-1-cx}{fx}$	
$Z_0 = \frac{\text{B}}{2*\tan(\frac{\text{Depth Active H}-\text{FOV}}{2})}$	
$\text{Depth V - FOV} = \arctan\left(\frac{cy}{fy}\right)+\arctan\frac{height\text{-}1\text{-}cy}{fy}$	

Note:

1. Depth intrinsics, including cx, cy, fx, fy, width and height, are obtained through SDK APIs, and these parameters may vary across different units.
2. At different depth values, the depth FOV is non-constant. The farther the depth, the greater the depth FOV.

ORBBEC. All Rights Reserved. https://www.orbbec.com/

Note: Orbbec reserves the right to change any information in the document without prior notice.

4.5.2 Typical Depth Intrinsics

Table 4-5-2 Typical Depth Intrinsics of Gemini 345Lg

Mode	Baseline /mm	Resolution：Width x Height		cx/pixel	cy /pixel	Fx & fy/pixel
		Width/pixel	Height/pixel			
Wide	88	1280	960	640	480	510.0 & 510.0
		640	480	320	240	255.0 & 255.0
Standard	88	1280	960	640	480	600.0 & 600.0
		640	480	320	240	300.0 & 300.0

4.5.3 Overview of Stream FOV

Table 4-5-3 Stream FOV for Gemini 345Lg

FOV	Aspect Ratio	Gemini 345Lg
Depth FOV @ 2m	4:3	Wide: H 104° x V 87°
		Standard: H 91° x V 78°
IR FOV	4:3	H 130° x V 95°
RGB FOV	16:9	H 137° x V 71°
	4:3	H 96° x V 71°
Hardware D2C FOV @ 2m	16:9	Wide: H 104° x V 71°
		Standard: H 91° x V 71°
	4:3	Wide: H 96° x V 71°
		Standard: H 91° x V 71°
Software D2C FOV @ 2m	16:9	Wide：H 94° x V 62°
		Standard：H 91° x V 62°
	4:3	Wide：H 78° x V 62°

ORBBEC. All Rights Reserved. https://www.orbbec.com/

Note: Orbbec reserves the right to change any information in the document without prior notice.

		Standard：H 78° x V 62°

4.5.4 FOV Illustrations

Table 4-5-4 Depth FOV of Gemini 345Lg (Wide)

Aspect ratio	Depth FoV
4:3	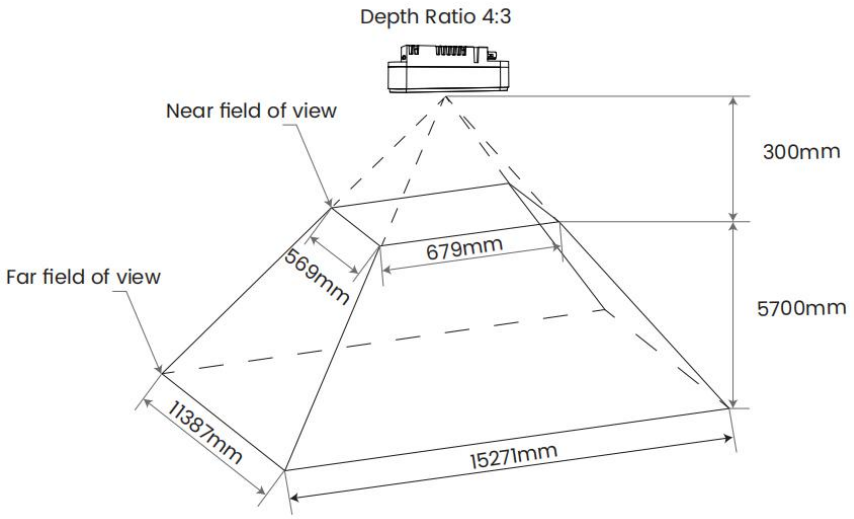

Table 4-5-5 Depth FOV of Gemini 345Lg (Standard)

Aspect ratio	Depth FoV
4:3	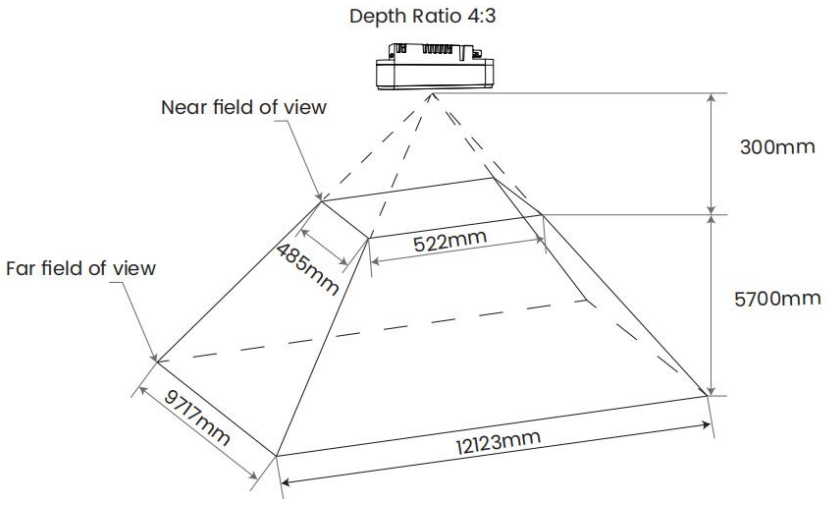

Note: Since the depth FOV varies at different distances, only the FOV measured at 2 m is provided for reference.

4.6 Depth to Color Alignment

Gemini 345Lg support spatially and temporally aligned output of D2C (Depth To Color) depth

ORBBEC. All Rights Reserved. https://www.orbbec.com/

Note: Orbbec reserves the right to change any information in the document without prior notice.

and color images. D2C (Depth To Color) refers to mapping each pixel point on the depth map to the corresponding position on the color map according to the internal and external parameters of the depth camera and the color camera, so as to obtain the RGBD map. Hardware depth-color alignment implemented via the ASIC significantly reduces host resource consumption; software depth-color alignment requires host resources but supports higher resolutions and frame rates.

4.6.1 Depth to Color by Software

Table 4-6-1 Depth to Color Alignment by Software

Depth Image before D2C	Color Image	Depth Image After D2C	Aspect Ratio
1280 x 960 / 640 x 480	1920 x 1080	1920 x 1080	16:9
	1280 x 720	1280 x 720	
	640 x 360	640 x 360	
	1280 x 960	1280 x 960	4:3
	640 x 480	640 x 480	

Table 4-6-2 Depth to Color FOV of Gemini 345Lg(Wide)

Aspect Ratio	D2C FOV
4:3	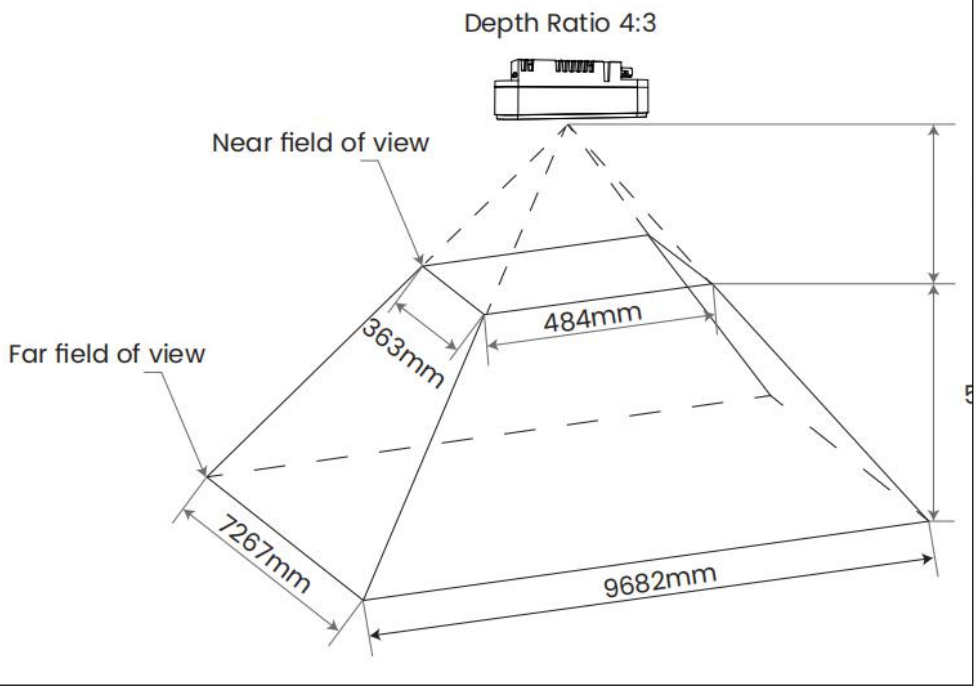

ORBBEC. All Rights Reserved. https://www.orbbec.com/

Note: Orbbec reserves the right to change any information in the document without prior notice.

16:9	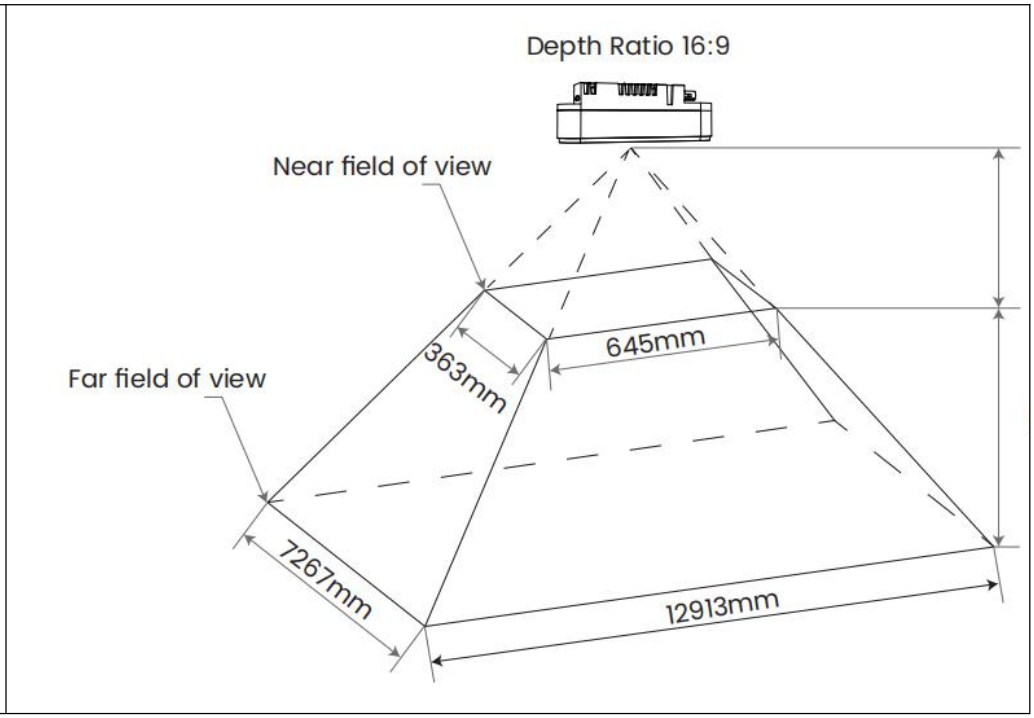

Table 4-6-3 Depth to Color FOV of Gemini 345Lg(Standard)

Aspect Ratio	D2C FOV
4:3	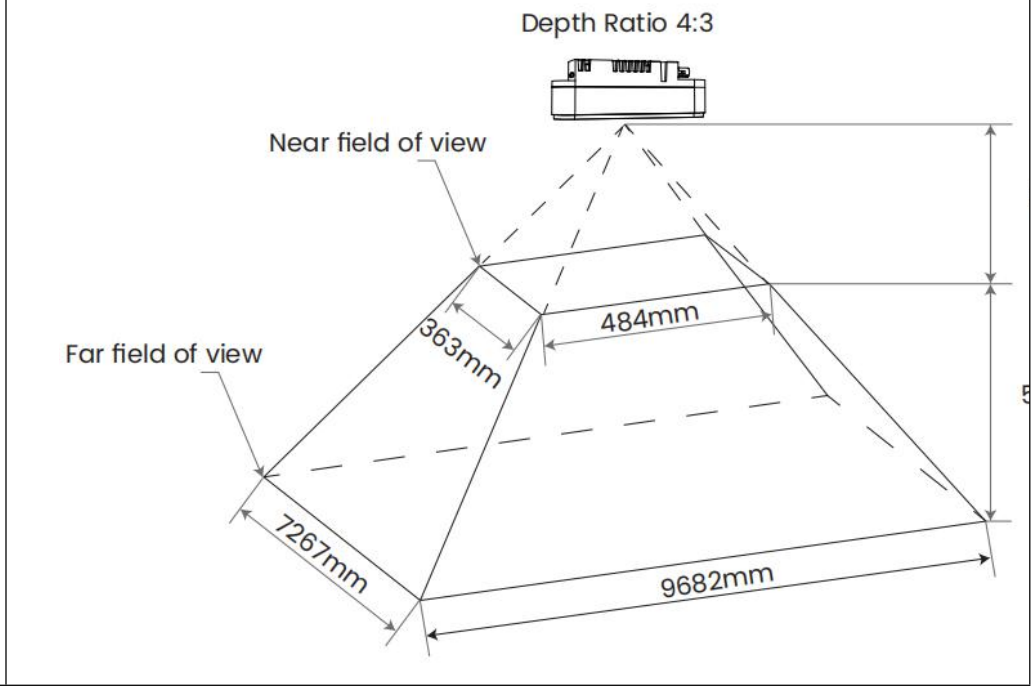

ORBBEC. All Rights Reserved. https://www.orbbec.com/

Note: Orbbec reserves the right to change any information in the document without prior notice.

16:9	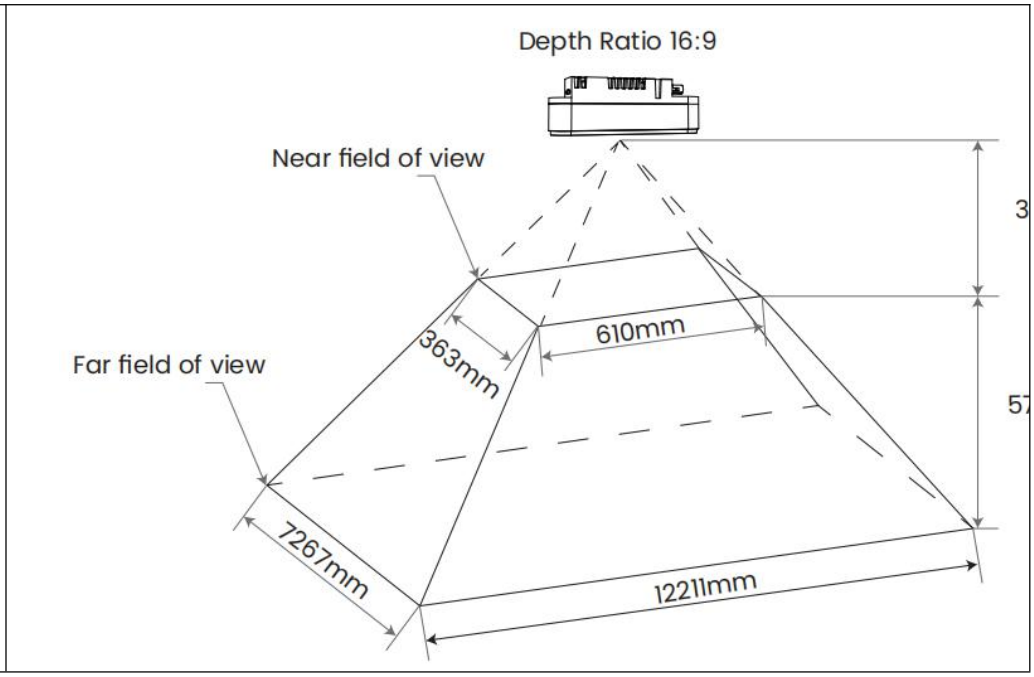

4.6.2 Depth to Color by Hardware

Table 4-6-4 Depth to Color Alignment by Hardware

Depth Image before D2C	Color Image	Depth Image After D2C	Aspect Ratio
1280 x 960 / 640 x 480	640 x 480	640 x 480	4:3
	1280 x 960	1280 x 960	
	640 x 360	640 x 360	16:9
	1280 x 720	1280 x 720	
	1920 x 1080	1920 x 1080	

1.Due to hardware processing capacity constraints, hardware Depth-color supports RGB resolutions only up to 640 x 480 or lower. For resolutions higher than 640 × 480:

- If the aspect ratio is 4:3, the frame will be aligned to 640 × 480 firstly, then scaled up to 1280 × 960;
- if the aspect ratio is 16:9, the frame will be aligned to 640 × 360 firstly, and then scaled up to the target resolution of 1280 × 720 or 1920 × 1080.

2.The frame rates of the two data streams must be identical for depth-color registration.

ORBBEC. All Rights Reserved. https://www.orbbec.com/

Note: Orbbec reserves the right to change any information in the document without prior notice.

Table 4-6-5 Depth to Color FOV of Gemini 345Lg(Wide)

Aspect Ratio	D2C FOV
4:3	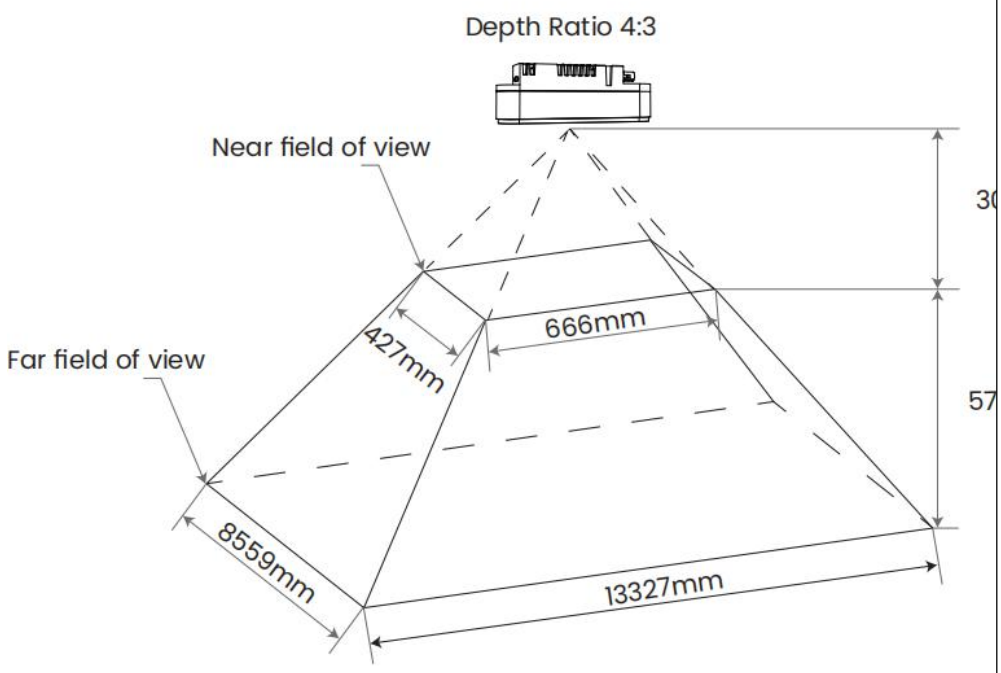
16:9	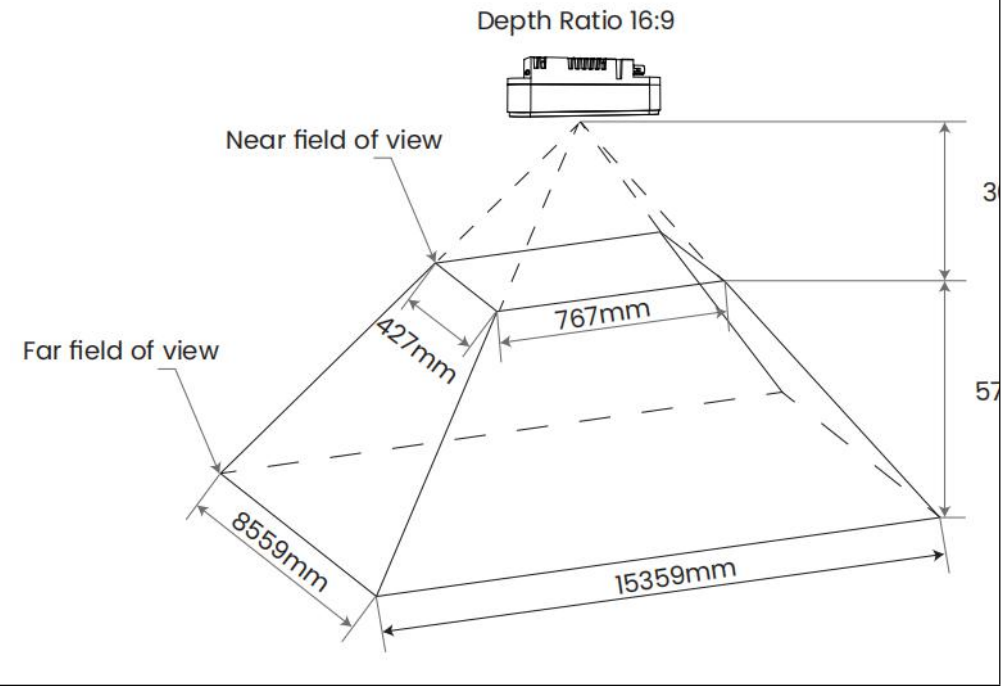

Table 4-6-6 Depth to Color FOV of Gemini 345Lg(Standard)

Aspect Ratio	D2C FOV

ORBBEC. All Rights Reserved. https://www.orbbec.com/

Note: Orbbec reserves the right to change any information in the document without prior notice.

4:3 / 16:9	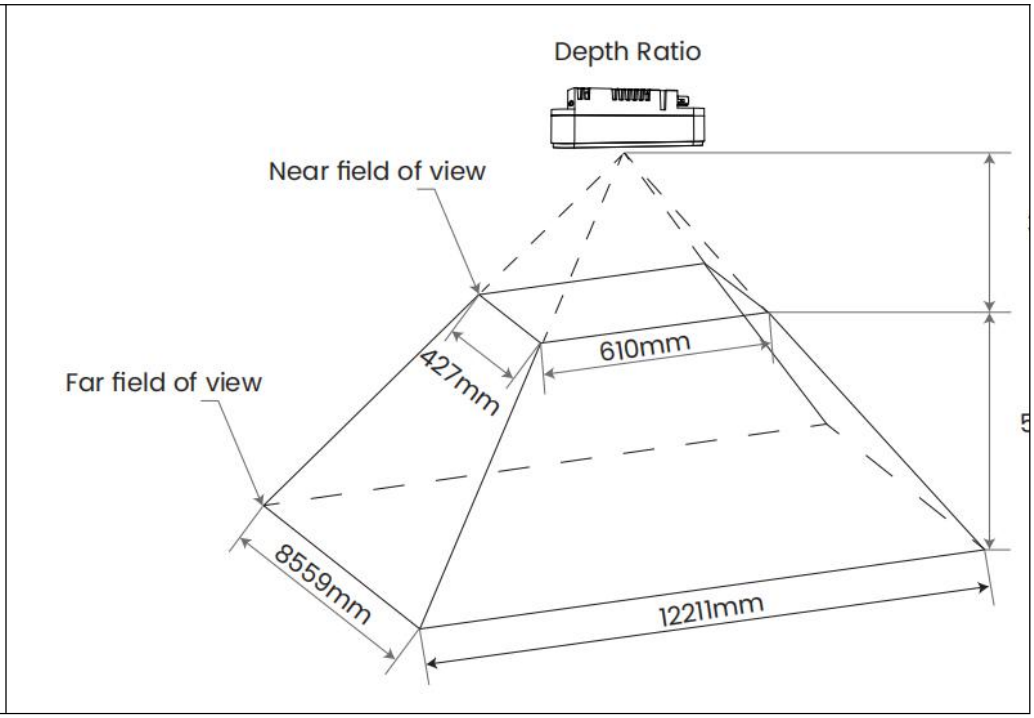

4.7 Minimum-Z Depth

The Minimum-Z Depth is the minimum distance from the depth camera to the scene.

Table 4-7-1 Minimum-Z Depth for Gemini 345Lg

Mode	FOV	Resolution	Minimum-Z
Wide	H 104° x V 87°	1280 x 960	0.19m
		640 x 480	
Standard	H 91° x V 78°	1280 x 960	0.22m
		640 x 480	

4.8 Coordinate System

For the Gemini 345Lg 3D camera, the plane where the 1/4 screw hole is located is defined as the bottom side, the glass cover surface is the front side, and the RGB module is positioned to the left of the LDM module.

The origin of the IMU coordinate system is situated at the physical sensor center point. The accelerometer and gyroscope coordinate systems are located at the back of the left IR. The

ORBBEC. All Rights Reserved. https://www.orbbec.com/

Note: Orbbec reserves the right to change any information in the document without prior notice.

positive X-axis of the coordinate system points to the right, the positive Y-axis points downwards, and the positive Z-axis points forwards.

The origin of the depth image coordinate system is at the optical center of the left IR module, while the origin of the color image coordinate system is at the optical center of the RGB module. The direction of the coordinate systems is the same: the positive X-axis points to the right, the positive Y-axis points downward, and the positive Z-axis points forward. The depth camera coordinate system origin is the default origin of the 3D camera, with coordinates (0,0,0). The reference positions of the depth origin, color origin, and IMU origin in the 3D camera coordinate system are shown in the chart below:

Table 4-8-1 Gemini 345Lg Coordinate System Position Reference

Coordinate System	Position in the 3D camera coordinate system		
	X（mm）	Y（mm）	Z(mm)
Depth	0	0	0
Color	36	0	-0.91
IMU	24.09	2.23	-25.33

Table 4-8-2 Gemini 345Lg Coordinate System Schematic

	Gemini 345Lg
IMU	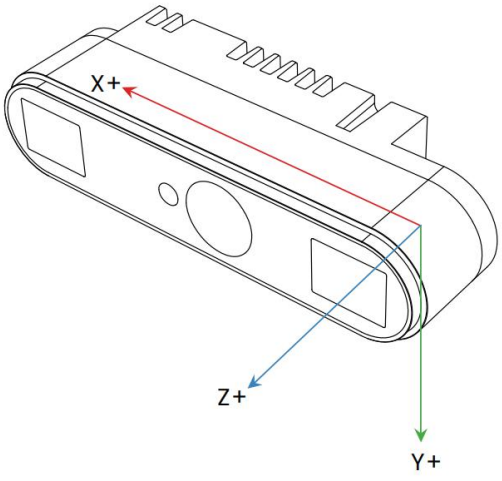

ORBBEC. All Rights Reserved. https://www.orbbec.com/

Note: Orbbec reserves the right to change any information in the document without prior notice.

Depth	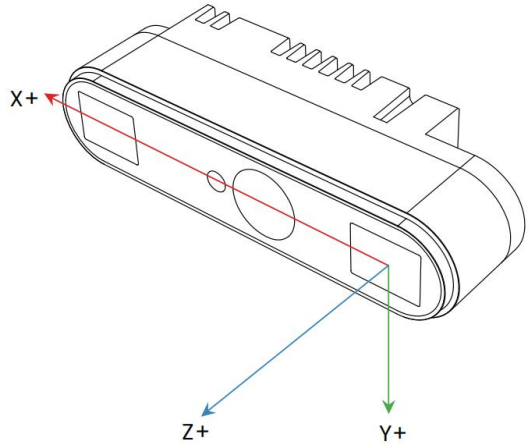
RGB	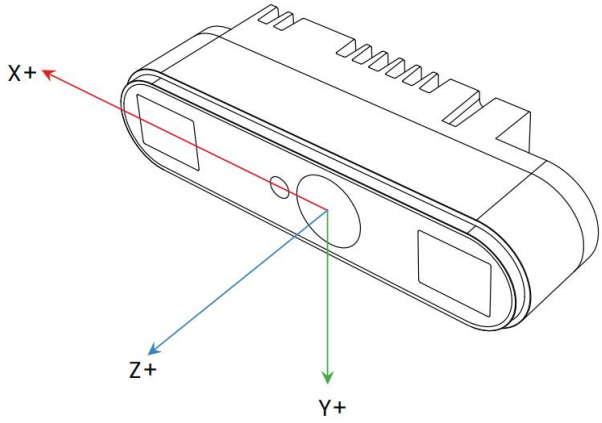

4.9 Camera Start Point Reference

The depth starting point or ground zero reference can be described as the starting point or plane where the depth equals 0. For Gemini 345Lg, the distance from the depth zero point to the front surface of the module is 4.42 mm.

Table 4-9-1 Camera Start Point Illustrations

Camera	Gemini 345Lg
Depth (Z')	4.42mm
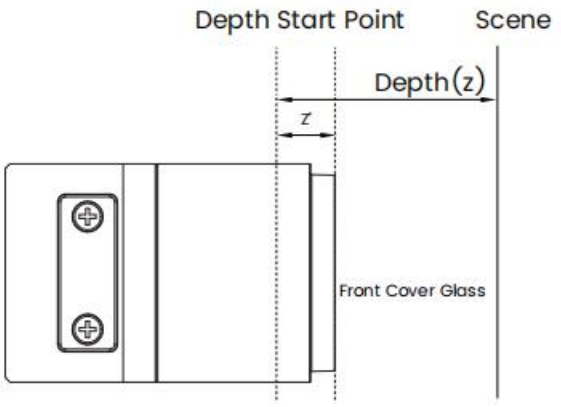	

ORBBEC. All Rights Reserved. https://www.orbbec.com/

Note: Orbbec reserves the right to change any information in the document without prior notice.

4.10 Streaming Mode

The Gemini 345Lg offers users flexible methods for acquiring IR, Depth, and RGB image data, with the most common being the specific frame rate streaming mode. In this mode, users set a target frame rate, resolution, and image format for each type of data, and then activate the corresponding data streams in sequence. The camera captures and outputs image data at the user-defined target frame rate, resolution, and image format. The user can select a specific frame rate for the current scene from predefined fixed frame rate values of 10fps, 15fps, 20fps, 30fps. The IMU output data stream rate is 100Hz, 200Hz, 400Hz, and 800Hz.

4.11 Multi-Camera Synchronization

4.11.1 Multi-camera Synchronization

The Gemini 345Lg is designed with a synchronization feature. In scenarios utilizing multiple cameras, it enables hardware synchronization among them. For a multi-camera use case, one camera can be initialized as primary, and the rest configured as secondary_synced.
Advantages of multi-camera setup:

- Increase camera coverage in a given space and fill in the occlusions where a single camera may have blind spots
- Capture multiple images of the same scene and scan objects from different angles
- Increase the effective frame rate to greater than 30 FPS

Using an USB/GMSL connector and matching cable, it is necessary to forward the synchronization signal through the device or host system.(Please follow the instructions in the SDK).
Multi-camera synchronization includes depth image synchronization and RGB image synchronization (time difference ≤ 5ms, when auto exposure off), using the multi-camera synchronization function.

Table 4-11-1 Topologies schematic diagram

Star Topology
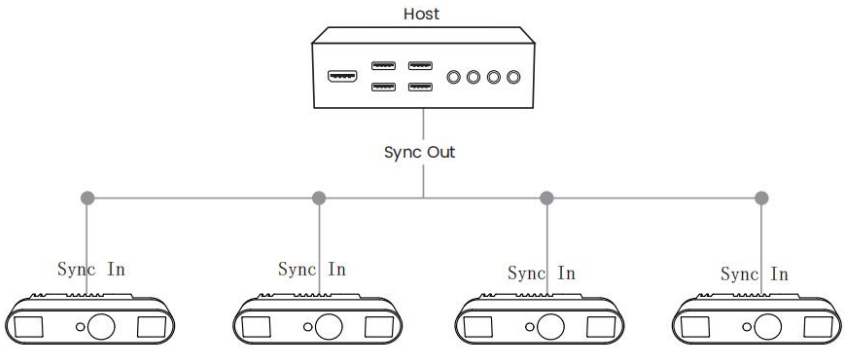

4.11.2 Description of multi-machine synchronization interface

Table 4-11-2 USB Synchronization Interfaces of Gemini 345Lg

Pin	Name	Description

ORBBEC. All Rights Reserved. https://www.orbbec.com/

Note: Orbbec reserves the right to change any information in the document without prior notice.

A8	SBU1	Input Voltage Level: 3.3V VIH: ≥2.48V (VCCI × 0.75), VIL: ≤1.15V (VCCI × 0.35) Input Current: ≥4mA (may be appropriately increased based on actual line length requirements) Trigger Method ： Rising Edge (Single Pulse)
B8	SBU2	Input Voltage Level: 3.3V VIH: ≥2.48V (VCCI × 0.75), VIL: ≤1.15V (VCCI × 0.35) Input Current: ≥4mA (may be appropriately increased based on actual line length requirements) Trigger Method ： Rising Edge (Single Pulse)

Table 4-11-3 GMSL Synchronization Interfaces of Gemini 345Lg

Pin	Definitions	Description
MFP9	SYNC_OUT*	Output Voltage Level: 1.8V* Active High Pulse Pulse Width ≥ 1 ms
MFP6	SYNC_IN	Output Voltage Level: 1.8V* Active High Pulse Pulse Width ≥ 1 ms

· In GMSL interface mode, the module does not yet support operating as a host.

· This level has no specific voltage requirement for the deserializer module design.

For detailed implementation and operational guidelines regarding multi-machine synchronization, please refer to the document: Gemini 345Lg Multi-machine Synchronization Solution.pdf

4.12 Time Synchronization

The camera's internal ASIC supports adding timestamps to each data stream and is compatible with hardware time synchronization. This enables the host system and the camera module to maintain an identical time reference.
Hardware synchronization follows the multi-camera synchronization hardware interface, as defined by the MFP7 signal in the GMSL interface.
For detailed implementation and operational guidelines regarding time synchronization, please refer to the document: Gemini 345Lg Time Synchronization Solution.pdf

4.13 Camera Functions

4.13.1 Depth Camera Functions

The camera supports configuration of parameters such as data stream type, resolution, frame rate, and exposure through the SDK, Wrapper API, or the OrbbecViewer tool. The key configurable parameters and their adjustable ranges are listed in the table below:

Table 4-13-1 Device Control

Control	Description	Setting

ORBBEC. All Rights Reserved. https://www.orbbec.com/

Note: Orbbec reserves the right to change any information in the document without prior notice.

Device Preset	The camera supports Standard and Wide FOV operating modes.	Standard / Wide
Synchronization Mode	For single-device and multi-camera synchronization modes.	Free Run / Standalone / Primary /Secondary- /IR IMU Sync
Timestamp Synchronization	For host and module time synchronization	Sync Immediately / Timed Sync

Table 4-13-2 Depth camera control

Control	Description	Settings
Mirror	Inverting images or data horizontally.	Disable, Enable
Flip	Inverting images or data vertically.	Disable, Enable
Rotate	Turning an image by a specific angle.	0°,90°,180°,270°
Auto Exposure	Auto Exposure Mode. When Auto Exposure is enabled, Exposure and Gain are set based on the environment condition.	Disable, Enable
AE Max Exposure(us)	AE Max Exposure	0 - 255
Manual Exposure(1) (us)	Sets the absolute exposure time when auto-exposure is disabled	1 - 18000
Gain(Gain 1.0=16)	Control sensor digital gain	1 - 244
Depth Unit(millimeter)	Depth Measurement Standard Units	0.001 - 10
Metadata	MIPI metadata.	Disable, Enable

Note: (1) Not supported in Auto Exposure Mode

Table 4-13-3 IR control

Control	Description	Setting
Laser Control	Laser on / off control	On / Off
Laser Power*	Laser energy level control	0 - 1
High Temperature Protect	-	Disable, Enable
Low Exposure Control	-	Disable, Enable

*When using the USB interface, the laser power can be set to either low or high level. The GMSL interface only supports the low-power level.

Table 4-13-4 Depth camera anvanced control

Control	Description	Setting
Disparity To Depth	Disparity-to-Depth Calculation	Disable / Hardware / Software

ORBBEC. All Rights Reserved. https://www.orbbec.com/

Note: Orbbec reserves the right to change any information in the document without prior notice.

Hardware Noise Removal	Noise filtering is performed through the ASIC.	0 - 1
Noise Removal Filter	Minimum depth difference	1 - 10000
	Maximum size of depth cluster	1 - 1000
Post Processing	Software Filtering Processing	Disable, Enable

Table 4-13-5 IR camera control

Control	Description	Settings
Mirror	Inverting images or data horizontally.	Disable, Enable
Flip	Inverting images or data vertically.	Disable, Enable
Rotate	Turning an image by a specific angle.	0°,90°,180°,270°
Auto Exposure	Auto Exposure Mode. When Auto Exposure is enabled, Exposure and Gain are set based on the environment condition.	Disable, Enable
AE Max Exposure(us)	AE Max Exposure	0 - 255
Manual Exposure(1) (us)	Sets the absolute exposure time when auto-exposure is disabled	1 - 18000
Gain(Gain 1.0=16)	Control sensor digital gain	1 - 244

Table 4-13-6 Color camera control

Control	Description	Settings
Auto Exposure	Automatically sets the exposure time and gain for the frame	Disable, Enable
Manual Exposure(1) (100us)	Sets the absolute exposure time when auto-exposure is disabled	10 - 318
Gain	Sets the amount of gain applied to the frame if auto-exposure is disabled	1 – 43
Brightness	Sets the amount of brightness applied when auto-exposure is enabled	-50 – 50
Sharpness	Sets the amount of sharpening adjustment applied to the frame	0 – 100
Saturation	Sets the amount of saturation adjustment applied to the frame	0 - 100
Contrast	Sets the amount of contrast based on the brightness of the scene	0 - 100
Hue	Sets the amount of hue adjustment applied to the frame	-64 – 63
Backlight Compensation	Sets a weighting amount based on brightness to the frame	Disable, Enable
Powerline Frequency	Specified based on the local power line frequency	Auto, 50, 60, Disabled

ORBBEC. All Rights Reserved. https://www.orbbec.com/

Note: Orbbec reserves the right to change any information in the document without prior notice.

	for flicker avoidance	

Note: (1) Not supported in Auto Exposure Mode

ORBBEC. All Rights Reserved. https://www.orbbec.com/

Note: Orbbec reserves the right to change any information in the document without prior notice.

5. Performance

5.1 Depth Performance

5.1.1 Depth Quality Assessment

Calculation of Depth Accuracy (Z-accuracy):

Depth accuracy (Z-accuracy) measures the per-pixel depth accuracy relative to the GT in a single frame depth image, excluding errors due to camera placement. GT is obtained by measuring the distance from depth origin to the reference target. Depth accuracy can be calculated using the following formula:
Depth_accuracy_Signed = Median (CP_Length – GT + PP_Dist)
where CP_Length represents the actual length between the depth origin and a fitted plane along the GT measuring direction, and PP_Dist denotes the per-pixel distance of the point cloud to the fitted plane.

Calculation of Spatial Precision:

The spatial precision is calculated as the percentage of the root mean square error (RMS Error) between each valid pixel and the optimal fitting plane compared to the true value (GT).

Calculation of Temporal Precision:

The temporal precision measures the variation in depth values over time within a ROI. The quality of a depth image can be assessed based on its temporal consistency, high-quality depth images should exhibit smooth and stable over time. This method is defined as the STD of depth values across a specific number of frames (for example, 30). The quantification of temporal noise is carried out on a per-pixel basis, followed by calculating the STD of each pixel over a specified time.

Depth Fill Rate Calculation:

The fill rate is used to calculate the proportion of valid pixels to total pixels within the target area (ROI region), primarily used to measure the completeness of depth.

5.1.2 Typical depth performance for Gemini 345Lg

Typical depth performance for Gemini 345Lg is shown in the table below:

Table 5-1-1 Typical Depth Performance

Depth Performance	Gemini 345Lg
Depth Accuracy	≤ ±3% (1280 x 960 @ 3 m & 90% x 90% ROI)

ORBBEC. All Rights Reserved. https://www.orbbec.com/

Note: Orbbec reserves the right to change any information in the document without prior notice.

	≤ ±6% (1280 x 960 @ 6 m & 80% x 80% ROI)
Spatial Precision	≤ ±1.2% (1280 x 960 @ 3 m & 90% x 90% ROI) ≤ ±3% (1280 x 960 @ 6 m & 80% x 80% ROI)
Temporal Precision	≤ 0.6% @3m
Fill Rate	≥ 99% (1280 x 960 @ 1 m & 90% x 90% ROI)

Note:

1. The actual working range and accuracy may vary with the ambient illumination and the objects being measured.

2. The test object is a reflectivity > 80% plane, and the reference range is 81% FOV (81% FOV is the remaining center 81% of the depth map area after cropping 5% from the top, bottom, left and right of the depth map) or 64% FOV (64% = 80% x 80% and of a similar definition).

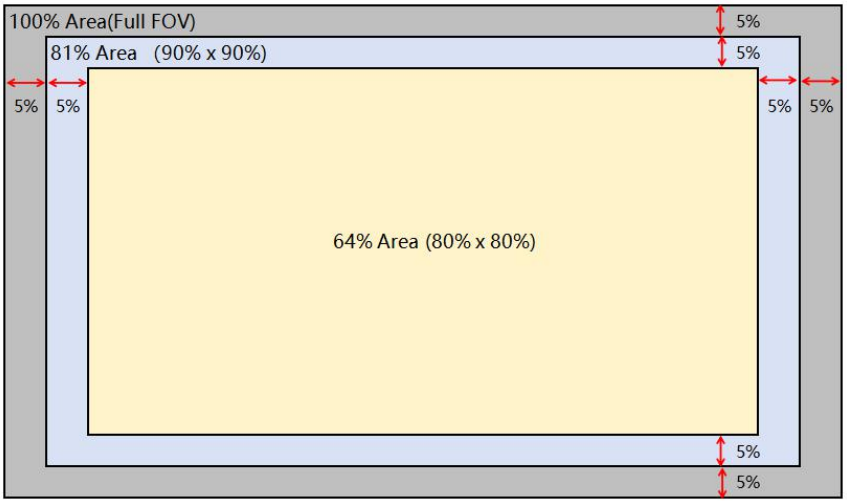

3. The depth performance of each 3D camera is validated at the production line before shipping to customers. The metrics reflect the depth performance under typical conditions. External impact factors over 3D cameras' whole lifespan may have significant impacts on their depth performance.

ORBBEC. All Rights Reserved. https://www.orbbec.com/

Note: Orbbec reserves the right to change any information in the document without prior notice.

5.2 Electrical Performance

5.2.1 Power Supply

The Gemini 345Lg camera utilizes different power supply methods depending on the interface used. It can be powered either via the GMSL2 FAKRA interface or the USB interface. The power requirements are as follows:

Table 5-2-1 Power Supply Requirements for Gemini 345Lg

Interface	Requirements
GMSL2 FAKRA*	≥ 600mA@12V
USB	≥ 1.5A@5V

* GMSL2 FAKRA Power Supply voltage: 9-15V (Typical 12V)

5.2.2 Power Consumption

Power consumption varies depending on the selected working mode.

Table 5-2-2 Gemini 345Lg typical configuration & tested power consumption Reference

Name	GMSL2 FAKRA	USB
Typical configuration	Laser power level: low Disparity search range: 256 D2C: off Depth: 640 x 480 @ 30 fps Y16 AE On RGB: 1920 x 1080 @ 30 fps YUYV AE On IR: 640 x 480 @ 30 fps Y8 AE On IMU ODR (output data rate): 200Hz	Laser power level: low Disparity search range: 256 D2C: off Depth: 640 x 480 @ 30 fps Y16 AE On RGB: 1920 x 1080 @ 30 fps YUYV AE On IR: 640 x 480 @ 30 fps Y8 AE On IMU ODR (output data rate): 200Hz
Average power consumption	3.6 W	2.8W
Peak power consumption	5W	3.8W

ORBBEC. All Rights Reserved. https://www.orbbec.com/

Note: Orbbec reserves the right to change any information in the document without prior notice.

Table 5-2-3 Gemini 345Lg Max Power Configuration & tested power consumption Reference

Name	GMSL2 FAKRA	USB
Max Power Configuration	Laser power level: low Disparity search range: 256 D2C: off Depth: 640 x 480 @ 30 fps Y16 AE On RGB: 1920 x 1080 @ 30 fps YUYV AE On IR: 640 x 480 @ 30 fps Y8 AE On IMU ODR (output data rate): 200Hz	Laser power level: High Disparity search range: 256 D2C: off Depth: 640 x 480 @ 30 fps Y16 AE On RGB: 1920 x 1080 @ 30 fps YUYV AE On IR: 640 x 480 @ 30 fps Y8 AE On IMU ODR (output data rate): 200Hz
Average power consumption	3.6 W	3.5 W
Peak power consumption	5W	6.7W

*Note: The data in the above table are laboratory measurements and are for design reference only.

5.2.3 Storage and Powered Conditions

Table 5-2-4 Gemini 345Lg Storage and Powered Conditions

Condition	Description	Min	Max	Unit
Storage (Ambient), Not Powered	Long term storage	-40	85	℃
	Humidity	＜95%RH(Non-condensing)		
Ambient, Powered	The camera ambient temperature when powered.	-20	65	℃
LDM Protect Temperature	The LDM temperature when powered	N/A	80	℃

5.2.4 ESD Performance

Table 5-2-5 Gemini 345Lg ESD Performance

Conditions	Powered-On	Powered-Off	Certification Standards
Contact Discharge	±8KV Class A	±8KV Class A	EN 61000-6-2
Air Discharge	±15KV Class A	±15KV Class A	

ORBBEC. All Rights Reserved. https://www.orbbec.com/

Note: Orbbec reserves the right to change any information in the document without prior notice.

5.3 Physical Performance

5.3.1 Ingress Protection

Ingress Protection Information

IP Rating	Power Supply	Protection Ability	Conditions
IP67	GMSL2 FAKRA	①Completely prevents dust from entering the camera; ②Completely prevents water up to 1m deep from entering the camera interior for 30 minutes.	①Use an IP67 cable and make sure the GMSL2 FAKRA connector is connected well ②Ensure that the USB connector cover is locked at the same time
	USB		①Use an USB power cables that meet IP67 requirements;

ORBBEC. All Rights Reserved. https://www.orbbec.com/

Note: Orbbec reserves the right to change any information in the document without prior notice.

6. Firmware

6.1 Firmware Update & Cautions

Gemini 345Lg supports update the firmware via online or location, you can upgrade or downgrade as needed. To get the firmware and changelog: TBC
Please note the following considerations:

- You can update the firmware in any working mode or preset;
- All data streams must be closed when update the firmware;
- During the firmware update, please ensure that the power supply and data transmission cable connections are stable;
- The camera will automatically restart after the firmware update is completed. You can also re-plug the cable after completion and restart it manually;

6.2 How to Update Firmware

The simplest way to update the firmware is through the Orbbec Viewer tool, which supports both manual updates and online updates. For detailed instructions, please refer to the documentation: Upgrade Guide

6.3 Recovery

Ensure the stability of cable during the update process to avoid upgrade failure. If the update process fails, disconnect the cable, re-insert it, and burn the product again. If re-burning is unsuccessful, the product may be damaged. Orbbec assumes no liability for any damages or losses resulting from the use of this product.

ORBBEC. All Rights Reserved. https://www.orbbec.com/

Note: Orbbec reserves the right to change any information in the document without prior notice.

7. SDK

Orbbec SDK is a flexible and modular platform for easy camera setup and runs on multiple platforms with a rich set of APIs. It supports camera access, device setup and configuration, data stream reading, processing, and viewing, RGB-D registration, and frame synchronization.
Its functions include:

- Access and control of camera devices
- Control of frame synchronization and alignment
- Acquisition of point cloud data
- Orbbec Viewer for camera testing and evaluation

Please visit **Orbbec SDK** for the latest SDK.

7.1 Temperature Sensor and Recording

The temperature of camera core components can be obtained, including laser temperature, IR sensor temperature, and IMU sensor temperature, through API commands.

7.2 Driving Instructions

When the product uses a GMSL2 FAKRA interface, the host controller must be designed with a GMSL2 compliant deserializer circuit and implement the required functions based on the pin interface configuration. The precompiled GMSL driver can be downloaded from Github.

ORBBEC. All Rights Reserved. https://www.orbbec.com/

Note: Orbbec reserves the right to change any information in the document without prior notice.

8. Use Guidance

8.1 Packing List

Table 8-1-1 Gemini 345Lg Package List

Package Type	Package List	Gemini 345Lg	Notes
Bulk	Camera	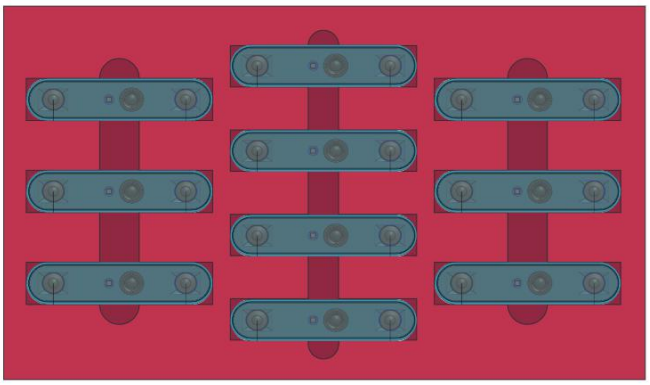	Minimum batch packaging quantity: 50 pcs
Box	Camera		Minimum batch packaging quantity: 20pcs
	1x USB Cable(1m)		
	1x Quick Start Guide		

8.2 Initialization and Operation

- Connect Gemini 345Lg via the USB cable to the host PC
- Download Orbbec SDK from [Orbbec SDK]
- Use Orbbec Viewer to validate that images can be streamed from all sensors with the following settings:

ORBBEC. All Rights Reserved. https://www.orbbec.com/

Note: Orbbec reserves the right to change any information in the document without prior notice.

- Depth stream: 640 x 480(default configuration)
- Color stream: 1280 x 720(default configuration)
- IMU enabled

The detailed quick start guide refers to the documentation: TBC

- If for any reason that the camera is not responding or not being detected, please unplug all cables from the camera and replug the cable into the host PC for resetting the camera state.

ORBBEC. All Rights Reserved. https://www.orbbec.com/

Note: Orbbec reserves the right to change any information in the document without prior notice.

9. Regulatory Compliance

These products are certified as follows:

9.1 Laser Safety certification

Class 1 Laser Product under the EN/IEC 60825-1:2014	U.S. FDA Accession Number: 2521540-000
CLASS 1 LASER PRODUCT	FDA

9.2 EMC Regulatory Compliance

CE-Declaration	FCC part 15 Declaration of Conformity
CE	FC

9.3 Environment Regulatory Compliance

RoHS 2.0, REACH, WEEE, ASTM F963-23, CPSIA, CP65, TPCH, 94/62/EC

RoHS	REACH	ASTM F963-23
RoHS COMPLIANT	REACH compliant	ASTM INTERNATIONAL
WEEE	**TSCA**	**CP65**
	UNITED STATES ENVIRONMENTAL PROTECTION AGENCY	PASS

ORBBEC. All Rights Reserved. https://www.orbbec.com/

Note: Orbbec reserves the right to change any information in the document without prior notice.

CPSIA	TPCH	94/62/EC
PASS	PASS	PASS

9.4 Reliability Verification

No.	Standards
1	ISO 16750-4：2010 Road vehicles — Environmental conditions and testing for electrical and electronic equipment Part 4: Climatic loads
2	ISO 16750-4 Environmental conditions and testing for electrical and electronic equipment Part 4: Climatic loads
3	GB/T2423.50-2012 Environmental testing - Part 2: Test methods - Test Cy: Damp heat，steady state
4	ISO_16750-3 Road vehicles — Environmental conditions and testing for electrical and electronic equipment Part 3: Mechanical loads
5	IEC 60068-2-11 Environmental testing - Part 2-11: Tests - Test Ka: Salt mist
6	SAEJ2527 Standard Xenon Aging
7	ISO_20567-1 Paints and varnishes - Determination of stone-chip resistance of coatings - Part 1: Multi-impact testing

ORBBEC. All Rights Reserved. https://www.orbbec.com/

Note: Orbbec reserves the right to change any information in the document without prior notice.

10. System Integration Guide

Use outside of the specified conditions could cause the device to fail and/or function incorrectly. These conditions are applicable for the environment immediately around the device under all operational conditions. When used with an external enclosure, active temperature control and/or other cooling solutions are recommended to ensure the device is maintained within these ranges.

10.1 Installation Recommendations

1.When using external housing around the camera for dust proofing, use foam inserts or rubber gaskets between the front of the camera and the external housing.
2.Avoid external forces applied to the camera chassis during installation process.
3.Disassembling chassis will void the warranty.
4.For the detailed installation reference solution, please refer to Document: TBC

10.2 Heat Dissipation

1.Avoid direct heat source around the camera.
2.Maximizing the space inside the external housing may help lower operating temperature.

10.3 Cable Design Guide

1. If using a USB interface, it is recommended to use a screw-locking USB 3.0 cable assembly.
2. If using a GMSL2 FAKRA interface, it is recommended to use a cable assembly made with the same brand and model of terminals. For Gemini 345Lg, the FAKRA terminals used are Amphenol C-Code terminals.

ORBBEC. All Rights Reserved. https://www.orbbec.com/

Note: Orbbec reserves the right to change any information in the document without prior notice.

11. Cautions

1. Follow the instructions carefully when operating the camera. Improper handling may lead to damage to the internal components.
2. Do not drop the camera or expose the camera to mechanical stress.
3. Do not attempt to modify the camera as such modifications may cause permanent damage or performance degradation.
4. The temperature of the camera may rise during long periods of use.
5. Do not touch the lens. Fingerprints on the lens may affect image quality.
6. Keep the product beyond the reach of children or animals to avoid accidents.
7. If the computer does not recognize the camera, verify that the cable meets the power and data transfer requirements, then replug it into the USB port to reconnect.
8. This product is classified as a Class 1 Laser Product under the international standard EN/IEC 60825-1, Edition 3 (2014). Using controls, adjustments, or procedures other than those specified herein may result in hazardous radiation exposure.

Safety and Handling Instructions:

●Avoid powering on the product if any external damage was observed.

●Do not attempt to open any portion of this product. There are no user serviceable parts.

●Be cautious of invisible laser radiation. Avoid direct exposure to the beam.

●To maintain compliance and safety standards, do not modify or service the product. Unauthorized modifications or servicing could result in emissions surpassing the Class 1 safety level.

●Only update the camera firmware with official releases that match the specific module SKU and revision to ensure proper functionality and safety.

ORBBEC. All Rights Reserved. https://www.orbbec.com/

Note: Orbbec reserves the right to change any information in the document without prior notice.

Appendix A Gemini 345Lg 2D Mechanical Diagram

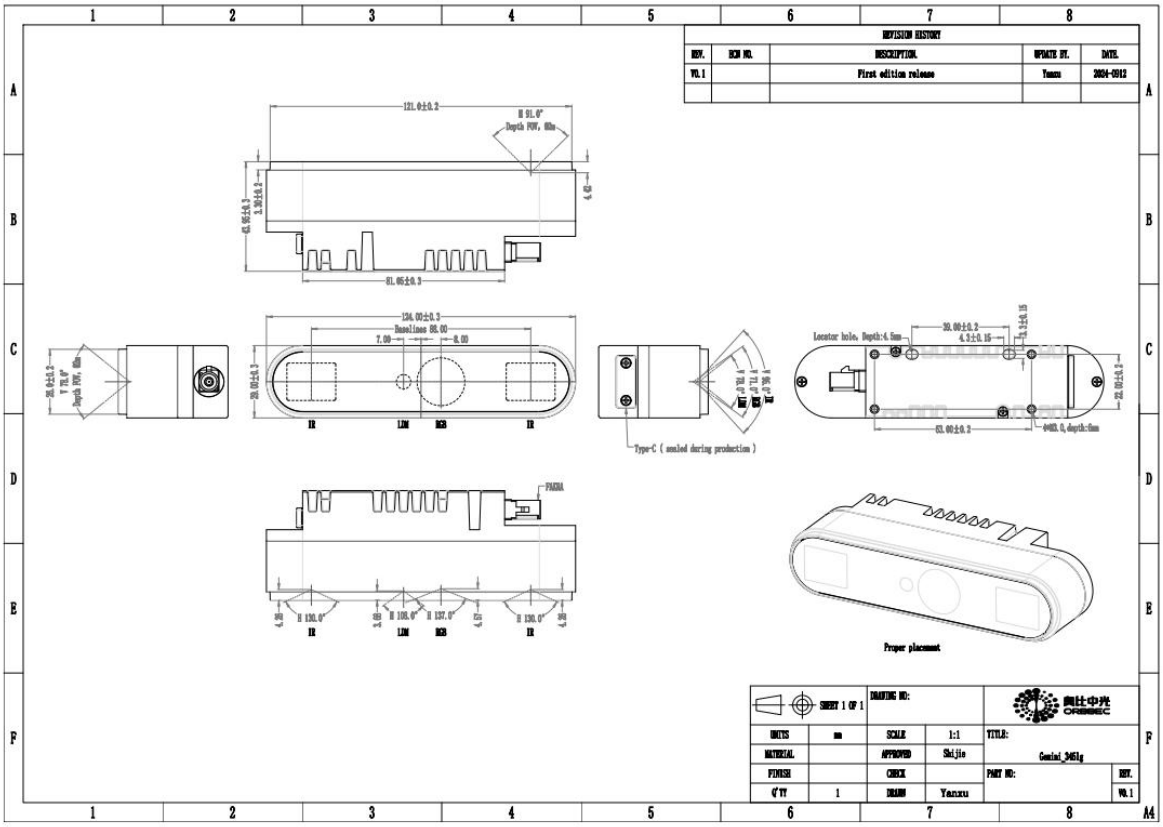

ORBBEC. All Rights Reserved. https://www.orbbec.com/

Note: Orbbec reserves the right to change any information in the document without prior notice.



ORBBEC. All Rights Reserved. https://www.orbbec.com/

Note: Orbbec reserves the right to change any information in the document without prior notice.